ANTI-SYPHON VALVE

Model A

UL Listed; Approved by the NYC Board of Standards and Appeals (Cal. No. 192-34-SA)

The **Model A Anti-Syphon Valve** reduces fire hazards and prevents oil spills caused by oil being siphoned from the storage tank onto the boiler room floor. The valve automatically shuts off the oil flow in the event of a broken or inadvertently left open oil suction line as required by NFPA 30 Flammable and Combustible Liquids Code. This protection is required by many codes and is recommended on all installations where the highest level of oil in storage is above the boiler room floor.

The assembly consists of a heavy bronze body with oil-proof gasketing, spring-loaded poppet, composition seat and dashpot. Tight shutoff is assured by the resilient seat material. Smooth, quiet operation is provided by the dashpot. For positive action, the valve is furnished for various hydrostatic heads: up to 5', 5-10', 10-15', and 15-20' (as measured vertically from the top of the tank to the pump inlet). Suction lines may be tested for tightness under reasonable pressure without damage to the seat. Maximum oil grades for these valves are as follows: ⅜" and ½" valves for No. 2 oil only, ¾" for No. 2 or No. 4 oil only and the 1" through 3" for all grades of fuel oil including No. 6.

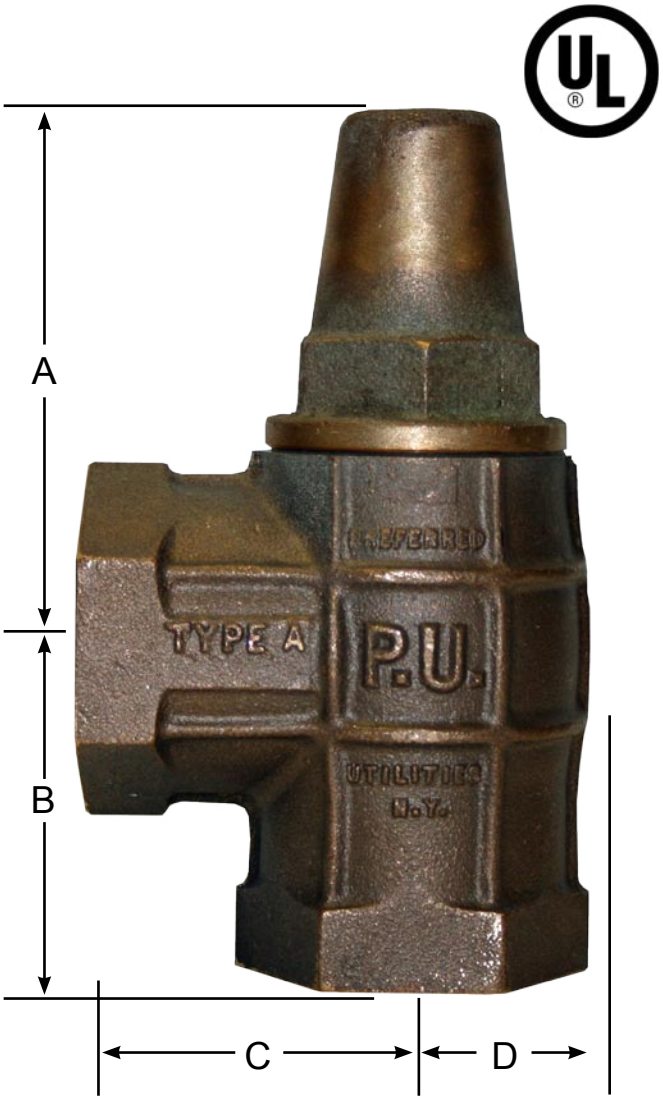

Application

The Anti-Syphon Valve is installed in a vertical position at the highest point in the suction line with no part of the line between the valve and the tank below the maximum oil storage level. Although suitable for outdoor installation, consideration should be given to the possibility that moisture entrained in the oil might freeze in the valve and immobilize the poppet. Complete instructions are furnished with each valve.

Operation

In the nonflow mode, spring pressure holds the valve poppet closed against the hydrostatic head. When flow is required, an additional vacuum is created by the oil pump, lifting the poppet and opening the valve. Since the total downstream pressure of the hydrostatic head plus the pump suction is required to lift and hold open the poppet, an opening in the suction line will dissipate the vacuum, close the valve and prevent an oil siphoning effect. Valve closure will be positive regardless of whether or not the pump is in operation.

Approvals

UL Listed

New York City Board of Standards and Appeals (Cal. No. 192-34-SA)

Suggested Specifications

Furnish and install inside the building, at the high point of the oil suction line, from each fuel oil tank, a U.L. listed and labeled Anti-Syphon Valve per NFPA 30 Flammable and Combustible Liquids Code. Valves that do not have a Underwriters Laboratory certification, listing and label and do not conform to Local, State and Federal Fire Codes shall not be acceptable. The installing contractor shall assume all liability for the installation of this valve and shall certify to the consulting engineer that a U.L. tested and labeled anti-syphon valve has been supplied and installed per manufacturer's instructions. Anti-Syphon valves supplied without a U.L. label shall be removed and a U.L. certified valve installed at the contractor's expense. The valve shall be sized to meet the flow requirements of the system and piping and shall be equipped with a spring to match the vertical distance between the highest oil storage level, of the main tank, and the inlet to the fuel oil pumps. Valve shall be as manufactured by Preferred Utilities Mfg. Corp. Danbury, CT, **Model A Anti-Syphon Valve.**

ANTI-SYPHON VALVE
Model A

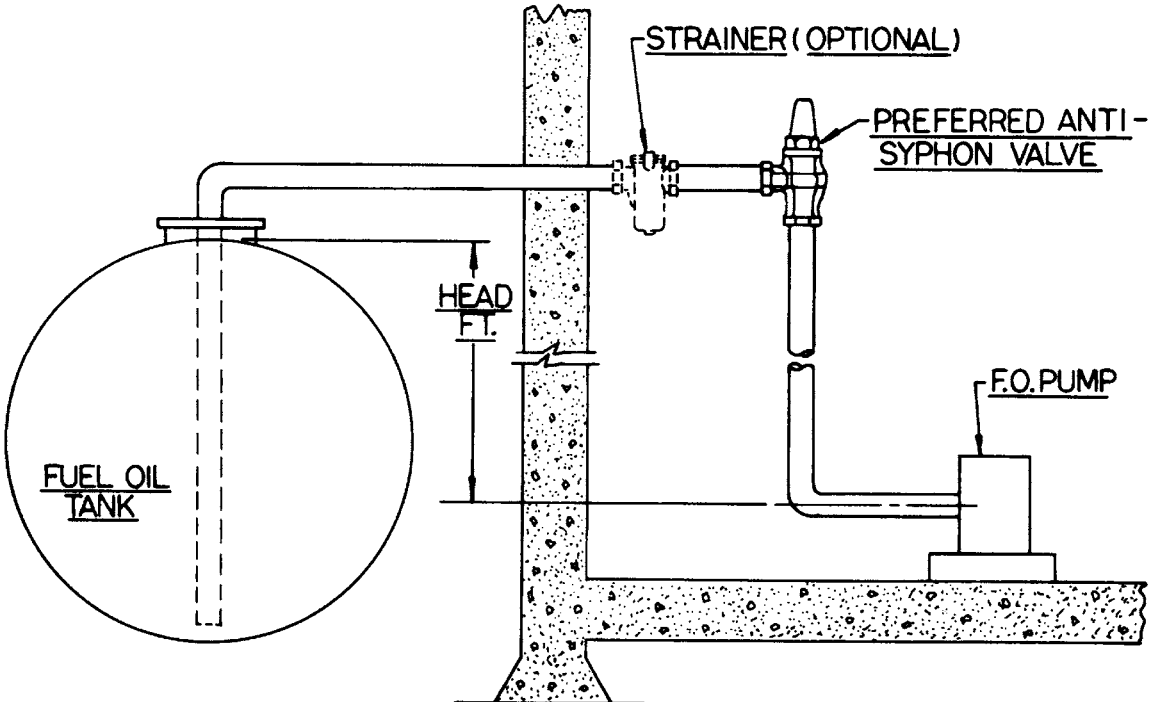

Ordering Information
See table below.

Model Numbers											
Head Size				Size	Grade Oil	Capacity GPH	Weight (lbs.)	Dimensions (inches)			
5'	10'	15'	20'					A	B	C	D
A-270	**A-271**	**A-272**	**A-273**	⅜"	2	30	2	2 ½	1 ½	1 ⅛	1 ¼
A-274	**A-275**	**A-276**	**A-277**	½"	2	30	2	2 ½	1 ½	1 ⅛	1 ¼
A-278	**A-279**	**A-280**	**A-281**	¾"	4	100	2.4	3 ⅜	1 ¾	1 ¾	1 ½
A-305	**A-306**	**A-307**	**A-308**	1"	6	300	10	5	3 ⅛	3 ⅛	1 ⅝
A-302	**A-283**	**A-284**	**A-285**	1 ¼"	6	300	10	5	3 ⅛	3 ⅛	1 ⅝
A-303	**A-287**	**A-288**	**A-289**	1 ½"	6	300	9.5	5	3 ⅛	3 ⅛	1 ⅝
A-304	**A-291**	**A-292**	**A-293**	2"	6	300	8.2	5	3 ⅛	3 ⅛	1 ⅝
A-294	**A-295**	**A-296**	**A-297**	2 ½"	6	1000	26.6	7 ½	4 ¼	3 ⅛	2 ½
A-298	**A-299**	**A-300**	**A-301**	3"	6	1000	23.3	7 ½	4 ¼	3 ⅛	2 ½